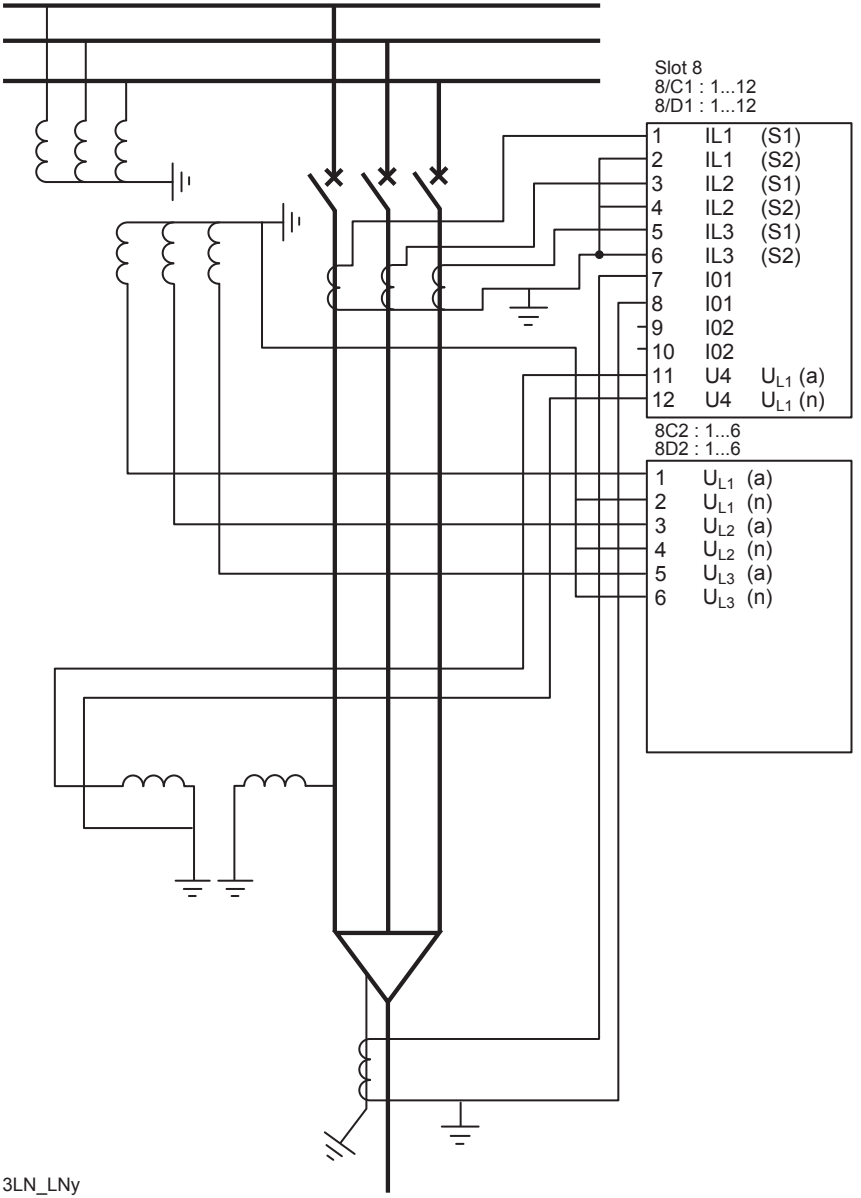
Slot 8
8/C1 : 1...12
8/D1 : 1...12
1 IL1 (S1)
2 IL1 (S2)
3 IL2 (S1)
4 IL2 (S2)
5 IL3 (S1)
6 IL3 (S2)
7 I01
8 I01
9 I02
10 I02
11 U4 U_{L1} (a)
12 U4 U_{L1} (n)
8C2 : 1...6
8D2 : 1...6
1 U_{L1} (a)
2 U_{L1} (n)
3 U_{L2} (a)
4 U_{L2} (n)
5 U_{L3} (a)
6 U_{L3} (n)

3LN_LNy